USERS MANUAL

DIGITAL AC/DC CLAMP METER

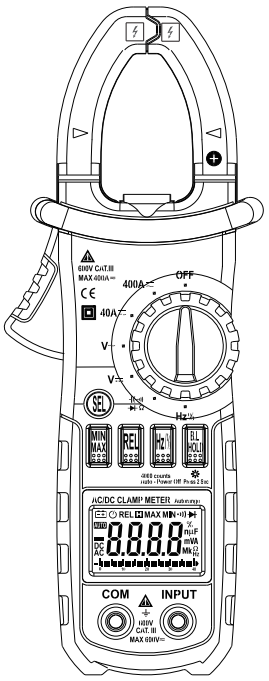

EMC&LVD

Designed and Conforms to IEC61010-1 CAT.III600V

RoHS

Y01-04-0015

CE Designed and Conforms to IEC61010-1 CAT.III600V

Before using the instrument,please read this manual carefully,and save it well for future using.

尺寸：100*142mm

Table of Contents

1.	**SAFETY INFORMATION**	1
1.1	PRELIMINARY	1
1.2	DURING USE	2
1.3	SYMBOLS	3
1.4	MAINTENANCE	3
2.	**DESCRIPTION**	4
2.1	NAMES OF PARTS	5
2.2	**SWITCH, BUTTONS AND INPUT JACKS**	8
2.3	LCD (Liquid-crystal display)	8
3.	**SPECIFICATIONS**	10
3.1	GENERAL SPECIFICATIONS	10
3.2	TECHNICAL SPECIFICATIONS	11
4.	**OPERATION INSTRUCTION**	16
4.1	HOLDING READINGS	16
4.2	SWITCHING REL	16
4.3	SWITCHING FREQUENCY OR DUTY	17
4.4	SWITCHING MAXIMUM OR MINIMUM VALUE	17
4.5	SWITCHING FUNCTIONS	18
4.6	BACK LIGHT AND CLAMP LIGHTING BULB	18
4.7	AUTO POWER OFF	19
4.8	PREPARING FOR MEASUREMENT	19

4.9	MEASURING AC CURRENT	20
4.10	MEASURING DC CURRENT	21
4.11	MEASURING AC VOLTAGE	23
4.12	MEASURING DC VOLTAGE	24
4.13	MEASURING FREQUENCY	26
4.14	MEASURING DUTY	29
4.15	MEASURING RESISTANCE	33
4.16	TESTING DIODE	35
4.17	TESTING CONTINUITY	36
4.18	MEASURING CAPACITANCE	37
5.	**MAINTENANCE**	39
5.1	REPLACING THE BATTERIES	39
5.2	REPLACING TEST LEADS	39
6.	**ACCESSORIES**	39

1. SAFETY INFORMATION

WARNING

- **BE EXTREMELY CAREFUL WHEN USING THIS METER. Improper use of this device can result in electric shock or destruction of the meter. Take all normal safety precautions and follow the safeguards suggested in this manual.**
- **To exploit full functionality of the meter and ensure safe operation, please read carefully and follow the directions in this manual.**

This meter has been designed according to IEC-1010 concerning electronic measuring instruments with an overvoltage category CAT III 600V and pollution 2.

Follow all safety and operating instructions to ensure safe use of the meter.

With proper use and care, this digital multimeter will give you years of satisfactory service.

1.1 PRELIMINARY

⇨ When using the meter, the user must observe all normal safety rules concerning:

- General protection against electric shock
- Protection of the meter against misuse

⇨ When the meter is delivered, check whether it has been damaged in transit.

⇨ After being stored and delivered under harsh conditions, the meter should be checked and confirmed whether any Damages have been incurred.

- Test leads must be kept in good condition. Before using check whether the insulation on test leads has been damaged and any wire has been exposed.
- Use the test leads supplied to ensure operation safety. If required, they must be replaced with test leads of the same model or class.

1.2 DURING USE

- Use the right input jack, function and range.
- Do not take measurements that exceed the protection limit values indicated in the specifications.
- Do not touch the metal tips of the test leads when the meter is connected to the circuit to be measured.
- Keep your fingers behind the probe barriers when taking a measurement with an effective voltage above 60V DC or 30V rms AC.
- Do not take voltage measurement if the value between the terminals and earth ground exceeds 600V.
- Select the highest range if the value scale to be measured in the manual range is unknown.
- Disconnect the test leads from the circuit under test before turning the rotary selector to change functions.
- Do not measure the resistance , capacitance, diode or continuity of live circuits.
- Do not connect the meter to any voltage source while the rotary selector is in the current, resistance, capacitance, diode or continuity range.
- Do not take capacitance measurements until the capacitor

to be measured has been fully discharged.

- Do not use the meter near explosive gases, steam or dirt.
- Stop using the meter if any abnormalities or faults are observed.
- Do not use the meter unless its rear case and battery cover is securely fastened in its original position.
- Do not store or use the meter in areas exposed to direct sunlight, at high temperature or with high relative humidity.

1.3 SYMBOLS

⚠	Caution, risk of danger (Important safety information; refer to the operation manual.)
ϟ	Application around and removal from HAZARDOUS LIVE conductors is permitted.
⧈	Double insulation (Protection class Ⅱ) .
CAT Ⅲ	CAT Ⅲ Overvoltage (Installation) category Ⅲ, Pollution Degree 2 per IEC1010-1 refers to the level of Impulse Withstand Voltage protection provided.
CE	Conforms to European Union Directive
⏚	Earth (ground) terminal

1.4 MAINTENANCE

- Do not attempt to remove the rear case to adjust or repair the meter. Such actions should only be performed by a technician who fully understands the meter and the danger involved.
- Before opening the case and battery cover of the meter, always disconnect test leads from all sources of electric

current. Disconnect the test leads from all sources of electric current before opening the rear case and battery cover of the meter.

- ⇨ To avoid any electric shock caused by error readings, replace the batteries immediately when the " " sign appears on the display.
- ⇨ Use damp cloth and mild detergent to clean the meter; do not use abrasives or solvents.
- ⇨ Turn the rotary selector to OFF position to switch off the power when the meter is not in use.
- ⇨ Remove the batteries to avoid damages to the meter if it will idle for a long time.

2. DESCRIPTION

- This meter is a portable professional measuring instrument with LCD and back light easily reading. The 'single-hand operation' design for the range switch makes measurement simple and easy. Overload protection and low battery indication are provided. It is an ideal multi-function Instrument with scores of practical applications for professional, workshop, school, hobby and home use.
- The meter can perform measurements of AC/DC voltage and current, resistance , frequency, duty, capacitance, as well as continuity and diode test.
- auto range is available.
- This meter is equipped with reading hold function.
- This meter is equipped with square value measuring function (at AC A and AC V range).
- This meter is equipped with auto zero function (at DCA range).

- This meter is equipped with maximum value measuring function.
- This meter is equipped with minimum value measuring function.
- This meter can measure frequency by clamp.
- This meter has function of auto power off.

2.1 NAMES OF COMPONENTS

1 Current Clamp
2 Clamp Lighting Bulb
3 Panel
4 Trigger
5 Function Switch Button (SEL)
6 MAX/MIN Switch Button (MAX/MIN)
7 Relative Switch Button (REL)
8 Liquid Crystal Display (LCD)
9 COM Jack
10 Input Jack
11 Hz/Duty Switch Button (Hz/%)
12 Reading Hold/Back Light Button (HOLD/B.L)
13 Rotary selector
14 OFF - power switch
15 "+" Symbol
16 "-" Symbol
17 Rear Case
18 Fixing Screw of Battery Cover
19 Battery Cover

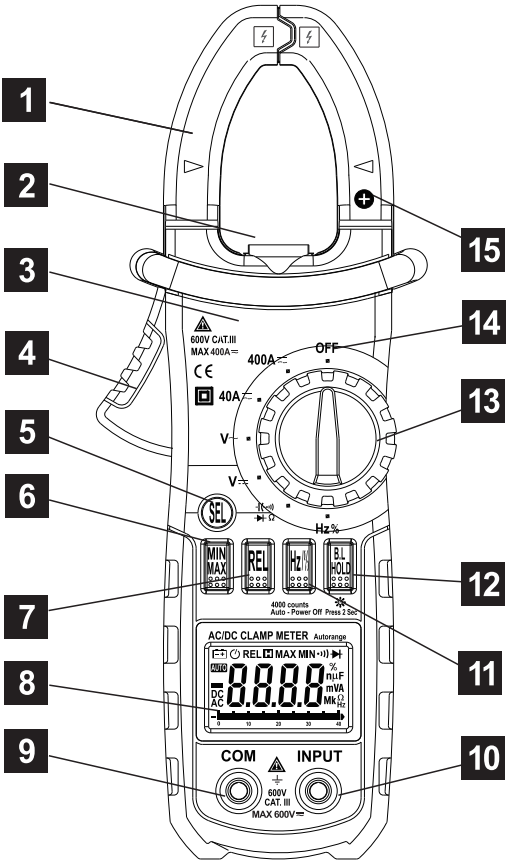
1
2
3
4
5
6
7
8
9
10
11
12
13
14
15
600V CAT.III
MAX 400A
400A
OFF
40A
V
V
SEL
Hz%
MIN MAX
REL
Hz%
B.L HOLD
4000 counts
Auto - Power Off Press 2 Sec
AC/DC CLAMP METER Autorange
REL MAX MIN
AUTO
DC AC
nuF
mVA
MkΩ Hz
COM
INPUT
600V CAT. III
MAX 600V

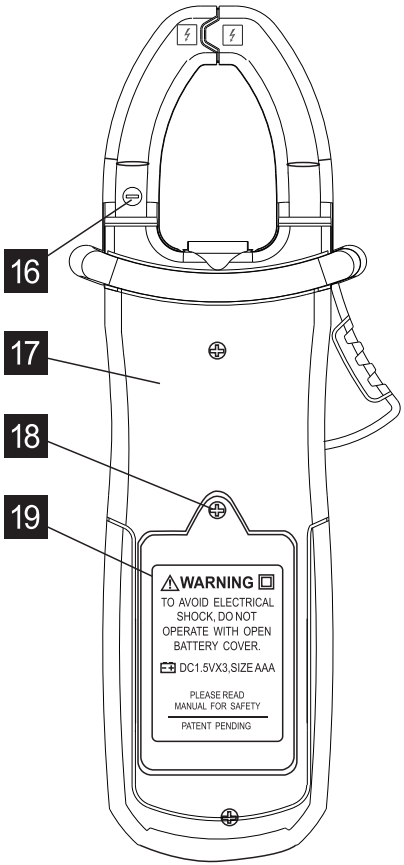
16
17
18
19
WARNING
TO AVOID ELECTRICAL SHOCK, DO NOT OPERATE WITH OPEN BATTERY COVER.
DC1.5VX3,SIZE AAA
PLEASE READ MANUAL FOR SAFETY
PATENT PENDING

2.2 SWITCH, BUTTONS AND INPUT JACKS

HOLD/B.L Button

- For holding the reading or control backlight

SEL Button

- For switching among measuring functions

REL Button

- The key is the relative value measurement.

Hz/% Button

- For switching between frequency and duty measuring functions.

MAX/MIN Button

- For switching between maximum and minimum value measuring function.

Rotary Selector

- For selecting functions and ranges.

OFF Position

- for turning off the power.

INPUT Jack

- For measuring voltage, resistance, frequency, duty, capacitance, diode, and continuity.

COM Jack

- Common input connection for current, voltage, resistance, frequency, duty, capacitance, diode, continuity measurement.

Clamp

- For measuring current

2.3 LCD (Liquid-crystal display)

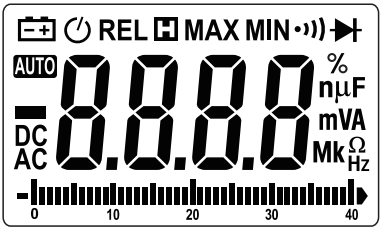

AC	ALTERNATING CURRENT
DC	Direct current
⊣▶⊢	Diode test
•))	Continuity buzzer
AUTO	Auto range mode
MAX	The maximum value is being measured
MIN	The minimum value is being measured.
REL	DCA zero and relative measure
	Auto power off
	Battery low
H	This indicates that the display data is being held.
%	Percent (Duty cycle)
mV, V	Milli-volts, Volts (Voltage)
A	Amperes (Current)
nF, μF	Nanofarad，Microfarad
Ω,kΩ, MΩ	Ohms,Kilo-ohms,Mega-ohms (Resistance)
Hz,	Hertz, Kilo-hertz (Frequency)，Milohertz

3. SPECIFICATIONS

Calibration is required once a year, to be carried out at a temperature between 18°C and 28 °C (64°F to 82°F) and relative humidity below 75%.

3.1 GENERAL SPECIFICATIONS

- Auto range.
- Overrange protection is provided for all ranges.
- Maximum voltage between terminals and earth ground: 600V DC or 600V rms AC
- Operating altitude: max. 2000 meters (7000 ft.)
- Display: 4000 counts with analog bar LCD display
- Maximum value display: 4000 digits
- Polarity indication: automatic; '- ' for negative polarity.
- Overrange indication: '0L' or '-0L'
- Converter Rate: 3 times/sec; Bar graph: 30 times/sec.
- Unit indication: function and unit.
- Auto power off time: 15 minute.
- Operating power : 1.5V×3 AAA batteries
- Battery low indication: ' ' on LCD
- Temperature factor: < 0.1×Accuracy /℃
- Operating temperature: 0℃ to 40℃ (32°F to 104°F)
- Storage temperature: -10℃ to 50℃ (10°F to 122°F)
- Dimension: 208×78×35mm
- Weight: approximate 340g (including batteries)

3.2 ELECTRICAL SPECIFICATIONS

Ambient temperature: 23±5℃ Relative humidity: < 75%

3.2.1 AC Current

Range	Resolution	Accuracy
40A	0.01A	± (3.0% of rdg + 6 digits)
400A	0.1A	

- Max. input current: 400A AC
- Frequency range: 40 to 400Hz
- Response: average value

3.2.2 DC Current

Range	Resolution	Accuracy
40A	0.01A	± (3.0% of rdg + 6 digits)
400A	0.1A	

- Max. input current: 400A DC

3.2.3 DC Voltage

Range	Resolution	Accuracy
400mV	0.1mV	± (1 .0% of rdg + 2digits)
4V	0.001V	± (0.7% of rdg + 2digits)
40V	0.01V	
400V	0.1V	
600V	1V	± (0.8%rdg+2dgt)

- Input impedance: 10MΩ
- Max. input voltage: 600V DC

NOTE:

At small voltage range, unsteady readings will appear before the

test leads contact the circuit. This is normal because the meter is highly sensitive. When the test leads contact the circuit, the true reading will be shown.

3.2.4 AC Voltage

Range	Resolution	Accuracy
4V	0.001V	± (0.8% of rdg + 3digits)
40V	0.01V	
400V	0.1V	
750 V	1V	± (1% of rdg + 4digits)

- Input impedance: 10MΩ
- Max. input voltage: 600V rms AC
- Frequency range: 40 to 400Hz
- Response: average value

3.2.5 Frequency

3.2.5.1 By A range (from current clamp):

Range	Resolution	Accuracy
10Hz	0.01Hz	± (1.5% of rdg + 5 digits)
1kHz	0.001KHz	
>1kHz	0.001KHz	

- Measurement range: 10 ~ 1kHz
- Input current range: ≥4A rms AC (higher input current at higher frequency)
- Max. Input current: 400A rms AC

3.2.5.2 By ACV range:

Range	Resolution	Accuracy
10Hz	0.01Hz	± (1.5% of rdg + 5 digits)
1kHz	0.001kHz	
10kHz	0.01kHz	
>10kHz	0.01kHz	Take it only as referance

- Measurement range: 10 ~ 10kHz
- Input voltage range: ≥ 0.6V rms AC (higher input voltage at higher frequency)
- Input impedance: 10MΩ
- Max. input voltage: 600V rms AC

3.2.5.3 By Hz/DUTY range

Range	Resolution	Accuracy
9.999Hz	0.001Hz	± (0.5% of rdg+3 digits)
99.99Hz	0.01Hz	
999.9Hz	0.1Hz	
9.999KHz	0.001 KHz	
99.99KHz	0.01 KHz	
999.9KHz	0.1 KHz	
9.999MHz	0.001MHz	

- Overload protection: 600V dc or 600V ac rms.
- Input Voltage range: 200mV-10V ac rms

3.2.6 Duty Cycle

Range	Resolution	Accuracy
0.1% - 99%	0.1%	± 3.0%

3.2.6.1 By A range (from current clamp):

- Frequency response: 10 ~1kHz
- Input current range: ≥4A rms AC

- Max. input current: 400A

3.2.6.2 By ACV range:

- Frequency response: 10 ~ 10 kHz
- Input voltage range: ≥ 1 V rms AC
- Input impedance: 10MΩ
- Max. input voltage: 600V rms AC

3.2.6.3 By Hz/DUTY range

- Frequency response: 1 ~ 10MHz
- Input voltage range: ≥ 500mV rms
- Overload protection: 600V rms AC

3.2.7 Resistance

Range	Resolution	Accuracy
400Ω	0.1Ω	± (0.8% of rdg + 3digits)
4kΩ	0.001kΩ	
40kΩ	0.01kΩ	
400kΩ	0.1kΩ	
4MΩ	0.001MkΩ	
40MΩ	0.1MΩ	± (1.2% of rdg + 3digits)

- Open circuit voltage: 0.4V
- Overload protection: 600V DC or rms AC

3.2.8 Diode

Range	Resolution	Function
⊣▶⊢	0.001V	Displaying approximate forward voltage of diode

- Forward DC current ~ 1mA
- Reversed DC voltage ~ 3.3V

- Overload protection: 600V DC or rms AC

3.2.9 Continuity

Range	Resolution	Function
•))	0. 1Ω	Built-in buzzer will sound, if resistance is lower than 40Ω.

- Open circuit voltage ~ 1.2V
- Overload protection: 600V DC or rms AC

3.2.10 Capacitance

Range	Resolution	Accuracy
400nF	0.1nF	± (4.0% of rdg + 5 digits)
4μF	0.001μF	
40μF	0.01μF	
400μF	0.1μF	
4000μF	1μF	

- Overload protection: 600V DC or rms AC

4. OPERATION INSTRUCTION

4.1 HOLDING READINGS

4.1.1 Press the "**HOLD/B.L**" button to hold the readings while taking measurement and the value on the display will be held.

4.1.2 Press the "**HOLD/B.L**" button again to release the reading hold function.

4.2 SWITCHING REL

1) REL key is the relative value measurement communication transmission key that acts with trigger. Press this key will enter into

the relative value measurement mode. The system will save the display value in the memory as the reference value. When doing the measurement later, the display value will be the difference value that the entry value deducts the reference value.

2) Press REL△ key will enter into the Manual Measurement Mode automatically.

3) In REL△ measurement status, press the key again, the REL△ function will be relocked.

4) Press the key in HOLD status, HOLD function will be cancelled. The system will save the display value in the memory as the reference value. When doing the measurement later, the display value is the difference that the entry value deducts the reference value.

5) Press SELECT Key or use Mode Switch will cancel RELΔ measurement mode, and go back to the normal mode (RELΔ will disappear in the LCD).

6) OL triggering: Under REL△ mode, OL shows when input value larger than the allowed value of the measurement mode. Press the key again, the relative measurement function will be cancelled. Disable to enter REL△ mode when OL shows.

7) No analog section bar function under REL△ mode.

4.3 SWITCHING FREQUENCY OR DUTY

4.3.1 During working at the voltage or current ranges, press the "**Hz/%**" button one time, frequency of the voltage or current will be measured. Press the "**Hz/%**" button twice, the meter will be changed into the duty range for measuring the duty cycle of the voltage or current. At the same time, the meter is changed into manual mode.

4.3.2 Press the "**Hz/%**" button again, meter will be back to the condition of the voltage or current measuring.

NOTE:

During working at maximum or minimum value measuring function, the meter can't be changed into frequency or duty cycle measuring mode.

4.4 SWITCHING MAXIMUM OR MINIMUM VALUE

4.4.1 At all ranges, press the "**MAX/MIN**" button one time, the meter can be set to maximum value measuring mode; press the button twice, the meter can be set to minimum value measuring mode; press the button three times, the meter will get back to normal test mode, and the maximum and minimum value will be recorded by the chip.

4.4.2 Press the " **MAX/MIN**" button more than two second , the meter will get back to normal test.

NOTE:

- During measuring maximum or minimum value, the meter will be set to manual mode automatically.
- During working at frequency or duty measuring function, the meter can't be changed into maximum or minimum value measuring mode.

4.5 SWITCHING FUNCTIONS

1) SELECT Key is a function selection key that acts with trigger. Press the key can choose the needed measurement mode: To choose DC or AC in DC/AC status, to choose Diode or Buzzer in Diode/Buzzer status, to choose Ohm, Cap, Diode or Buzzer in Ohm/Cap/Diode/ Buzzer status.
2) Press the key then turn on the power, the Auto Power-off function will be cancelled, the signal "APO" disappears in LCD, and enter into Sleep Status (Power-Off). Press the key then power on will have the Auto Power-Off function.

4.6 BACK LIGHT AND CLAMP LIGHTING BULB

4.6.1 Press the " **HOLD/B.L**" button for two or more seconds to switch on the back light if the light in the environment is too dim for taking reading, which will last for 15 seconds.

4.6.2 During the back light is working, press the "**HOLD/B.L**" button for two or more seconds, it will be turned off.

4.6.3 At the current range, when the back light is switched on, the clamp lighting bulb will be turned on at the same time.

NOTE:

- LED which requires a larger working current, is the main source of back light. Although the meter is equipped with a timer set at about 15 seconds (i.e. the back light will be off automatically after about 15 seconds), frequent use of the back light will shorten the life of the batteries. Therefore, do not use the back light unless necessary.
- When the battery voltage is ≤3.7V, the symbol " " (battery low) will appear on the LCD. When the back light is on, even if the batter is ≥3.7V, the " " may appear because of its large

working current which will cause the voltage to drop. (The accuracy of the measurement cannot be assured when the " " symbol appears.) In this case, you need not replace the batteries yet. Normally, the batteries can last until the " " appears when the back light is not being used.

4.7 AUTO POWER OFF

4.7.1 If the mode switch or keys of the meter is no action within 15 minutes, the system will power off automatically (sleep mode). In Auto Power-off status, press any key, the meter will "Auto Power-On" (Operation Mode)

4.8 PREPARATING FOR MEASUREMENT

4.8.1 Switch on the power by turning the rotary selector. If the battery voltage is lower than 3.7V, the " " symbol will appear and the batteries should be replaced.

4.8.2 The " ⚠ " symbol shows that the input voltage or current should not exceed the specified value in order to protect the internal circuit from damage.

4.8.3 Turn the rotary selector to the required function and range to be measured.

4.8.4 Connect the common test lead first and then the charged test leads when making connection. Take away the charged test lead first when disconnecting.

4.9 MEASURING AC CURRENT

WARNING ⚠

Beware of Electrocution.
Ensure that the test leads are disconnected from the meter before making current clamp measurements.

4.9.1 Set the rotary selector to the **40A** or **400A** range position.

4.9.2 push the REL key make sure the LCD display zero if the unsteady reading appear before measurement.
4.9.3 Press the trigger to open jaw. Fully enclose only one conductor.
4.9.4 Take the reading on the LCD.

NOTE:

- Do not put more than one cable into the jaw during test, otherwise incorrect test value might be obtained.
- For optimum results, center the conductor in the jaw.
- At the manual range mode, when only 'OL' is shown on the LCD, it means the measurement has exceeded the range. A higher range should be selected.
- If the scale of the value to be measured is unknown beforehand, set the range to the highest.
- "⚠" means the maximum input current is 400A rms AC.

4.10 MEASURING DC CURRENT

WARNING ⚠

Beware of Electrocution.

Ensure that the test leads are disconnected from the meter before making current clamp measurements.

4.10.1 Set the rotary selector to the 40**A or 400A** range position.
4.10.2 Press the SEL key turn to DC current measurement mode..
4.10.3 Press the "**REL**" button, the meter will be set to zero.
4.10.4 Press the trigger to open jaw. Fully enclose only one conductor.
4.10.5 Take the reading on the LCD.
4.10.6 Symbol "**-**" will be displayed on LCD if the direction of the current is negative.

NOTE:

- Do not put more than one cable into the jaw during test, otherwise incorrect test value might be obtained.
- For optimum results, press the "**REL**" button to make the meter get into zero first.
- For optimum results, center the conductor in the jaw.
- At the manual range mode, when only 'OL' or '-OL' is shown on the LCD, it means the measurement has exceeded the range. A higher range should be selected.
- Under the manual range mode, when the scale of the value to be measured is unknown beforehand, set the range to the highest.
- "⚠" means the maximum input current is 400A DC.

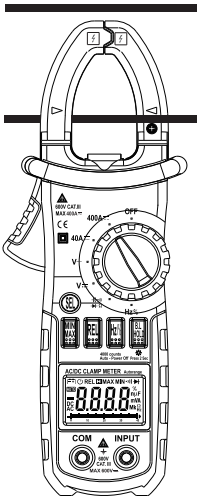

Correct

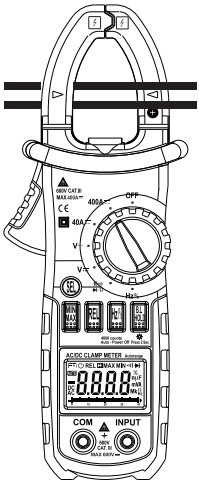

Incorrcet

4.11 MEASURING AC VOLTAGE

WARNING

Beware of Electrocution.
Pay special attention to avoid electric shock when measuring high voltage.
Do not input the voltage which more than 600V rms AC.

4.11.1 Plug the black test lead into the **COM** jack and the red test lead into the **INPUT** jack.

4.11.2 Set the rotary selector to V~ position to make the meter get into AC V range.

4.11.3 Connect the test leads to the voltage source or load terminals for measurement.

4.11.4 Take the reading on the LCD.

NOTE:

- "⚠" means the maximum input voltage is 600V rms AC.
- If the test result is more than 600V rms AC, symbol "OL" will be displayed on LCD and the build-up buzzer will sound.

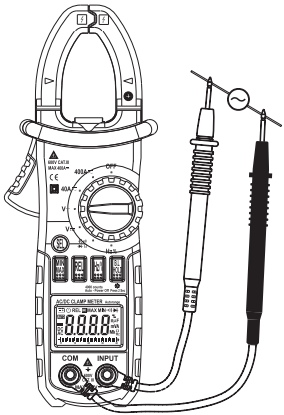

4.12 MEASURING DC VOLTAGE

WARNING

Beware of Electrocution.
Pay special attention to avoid electric shock when measuring high voltage.
Do not input the voltage which more than 600V DC.

4.12.1 Plug the black test lead into the **COM** jack and the red test lead into the **INPUT** jack.

4.12.2 Set the rotary selector to at the **V⎓** range position.

4.12.3 Connect the test leads to the voltage source or load terminals for measurement.

4.12.4 Take the reading on the LCD.The polarity symbol denotes the polarity of the end connected by the red test lead.

NOTE:

- At small voltage range, unsteady readings will appear before the test leads contact the circuit. This is normal because the meter is highly sensitive. When the test leads contact the circuit, the true reading will be shown.
- "⚠" means the maximum input voltage is 600V DC.
- If the test result is more than 600V DC, symbol "OL" will be displayed on LCD and the build-up buzzer will sound.

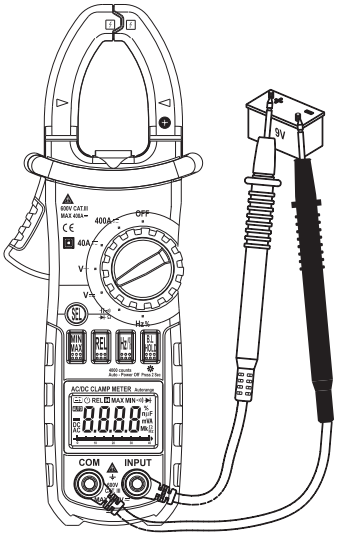

4.13 MEASURING FREQUENCY

4.13.1 **By A range (from current clamp):**

WARNING

Beware of Electrocution.

Ensure that the test leads are disconnected from the meter before making current clamp measurements.

4.13.1.1 Set the rotary selector to the **A** range (A ~ or A ⎓) position.

4.13.1.2 Press the trigger to open jaw. Fully enclose only one conductor.

4.13.1.3 Press the "**Hz/%**" to switch to the frequency measurement.

4.13.1.4 Take the reading on the LCD.

NOTE:

- Do not put more than one cable into the jaw during test, otherwise incorrect test value might be obtained.
- Frequency test range is 10Hz - 1kHz. '00.0' will be displayed on LCD if the test frequency is lower than 10.0 Hz. It is possible to test the frequency which is higher than 1 kHz but the tolerance of the test result can not be ensure.
- "⚠" means the maximum input current is 400A rms AC.

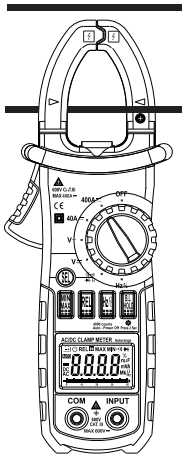

Correct

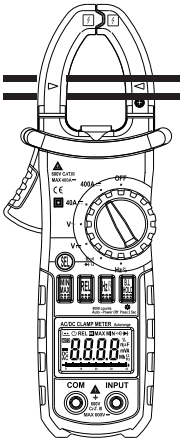

Incorrcet

4.13.2 **By V range:**

WARNING

Beware of Electrocution.

Pay special attention to avoid electric shock when measuring high voltage. Do not input the voltage which more than 600V rms AC.

4.13.2.1 Plug the black test lead into the **COM** jack and the red test lead into the **INPUT** jack.

4.13.2.2 Set the rotary selector to the V~ range position.

4.13.2.3 Press the "**Hz/%**" key to switch to frequency measurement.

4.13.2.4 Connect test leads to the two ends of the source or load for measurement.

4.13.2.5 Take the reading on the LCD.

NOTE:

- Frequency test range is 10Hz -10kHz. It is possible to test the frequency which is higher than 10kHz but the tolerance of the test result can not be ensure.
- "⚠" means the maximum input voltage is 600V rms AC.

4.13.3 **By HZ/DUTY range:**

WARNING

Beware of Electrocution. Pay special attention to avoid electric shock when measuring high voltage. Do not input the voltage which more than 250V rms AC.

4.13.3.1 Plug the black test lead into the **COM** jack and the red test lead into the **INPUT** jack.

4.13.3.2 Set the rotary selector to the **HZ/DUTY** range position.

4.13.3.3 Connect test leads to the two ends of the source or load for

measurement.

4.13.3.4 Take the reading on the LCD.

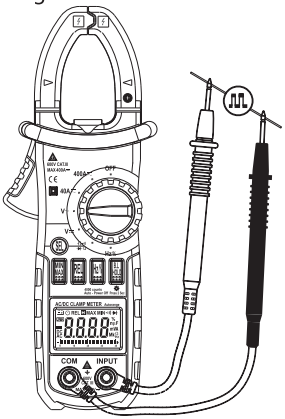

4.14 MEASURING DUTY

4.14.1 **By A range (from current clamp):**

WARNING

Beware of Electrocution.

Ensure that the test leads are disconnected from the meter before making current clamp measurements.

4.14.1.1 Set the rotary selector to the **A** range position.

4.14.1.2 Press the trigger to open jaw. Fully enclose only one conductor.

4.14.1.3 Press the "**Hz/%**" to switch to the DUTY measurement.

4.14.1.4 Take the reading on the LCD.

NOTE:

- Do not put more than one cable into the jaw during test, otherwise incorrect test value might be obtained.
- If the duty cycle is less than 10%, symbol 'UL' will be displayed on LCD; if the duty cycle is more than 94.9%, symbol 'OL' will be displayed on LCD.
- The input signal frequency range is 10 – 1kHz. It is possible to test duty cycle of the higher than 1 kHz frequency signal, but the tolerance of the test result can not be ensure.
- "⚠" means the maximum input current is 400A rms AC.

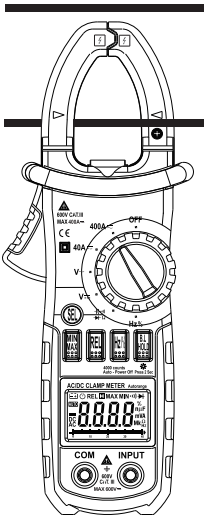

Correct

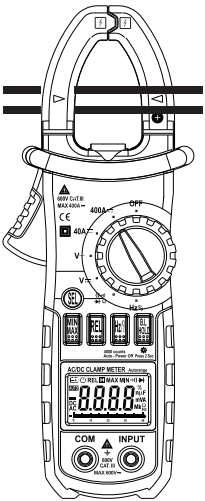

Incorrcet

4.14.2 **By V range:**

WARNING

Beware of Electrocution.

Pay special attention to avoid electric shock when measuring high voltage.

Do not input the voltage which more than 600V rms AC.

4.14.2.1 Plug the black test lead into the **COM** jack and the red test lead into the **INPUT** jack.

4.14.2.2 Set the rotary selector to the V~ range position.

4.14.2.3 Press the "**Hz/%**" to switch to DUTY measurement.

4.14.2.4 Connect test leads to the two end of the source or load for measurement.

4.14.2.5 Take the reading on the LCD.

NOTE:

- If the duty cycle is less than 10%, symbol 'UL' will be displayed on LCD; if the duty cycle is more than 94.9%, symbol 'OL' will be displayed on LCD.
- The input signal frequency range is 10 – 10 kHz. It is possible to test duty cycle of the higher than 10 kHz frequency signal, but the tolerance of the test result can not be ensure.
- "⚠" means the maximum input voltage is 600V rms AC.

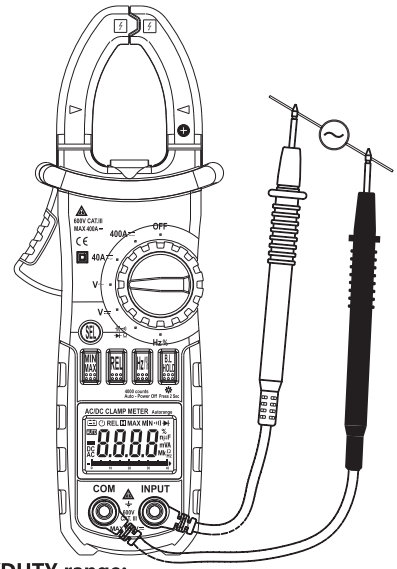

4.14.3 **By HZ/DUTY range:**

WARNING

Beware of Electrocution. Pay special attention to avoid electric shock when measuring high voltage. Do not input the voltage which more than 600V rms AC.

4.14.3.1 Plug the black test lead into the **COM** jack and the red test lead into the **INPUT** jack.

4.14.2.2 Set the rotary selector to the HZ/DUTY range position.

4.14.2.3 Press the "**Hz/%**" to switch to DUTY measurement.

4.14.2.4 Connect test leads to the two end of the source or load for measurement.

4.14.2.5 Take the reading on the LCD.

NOTE:

- If the duty cycle is less than 10%, symbol 'UL' will be displayed on LCD; if the duty cycle is more than 99.9%, symbol 'OL' will be displayed on LCD.
- The input signal frequency range is 10 – 10 kHz. It is possible to test duty cycle of the higher than 10 kHz frequency signal, but the tolerance of the test result can not be ensure.
- "⚠" means the maximum input voltage is 600V rms AC.

4.15 MEASURING RESISTANCE

WARNING

Beware of Electrocution.

When measuring in-circuit resistance, make sure that the power of the circuit under test has been turned off and that all capacitors have been fully discharged.

4.15.1 Plug the black test lead into the **COM** jack and the red test lead into the **INPUT** jack.

4.15.2 Set the rotary selector to the range position to make the meter get into Ω range.

4.15.3 Connect the test leads to the ends of the resistor or circuit for measurement.

4.15.4 Take the reading on the LCD.

NOTE:

1) When the input is open, 'OL' will appear on the LCD to indicate that the range has been exceeded.

2) For measuring resistance above 1MΩ, it may take a few seconds to get a steady reading. This is normal for high resistance reading.

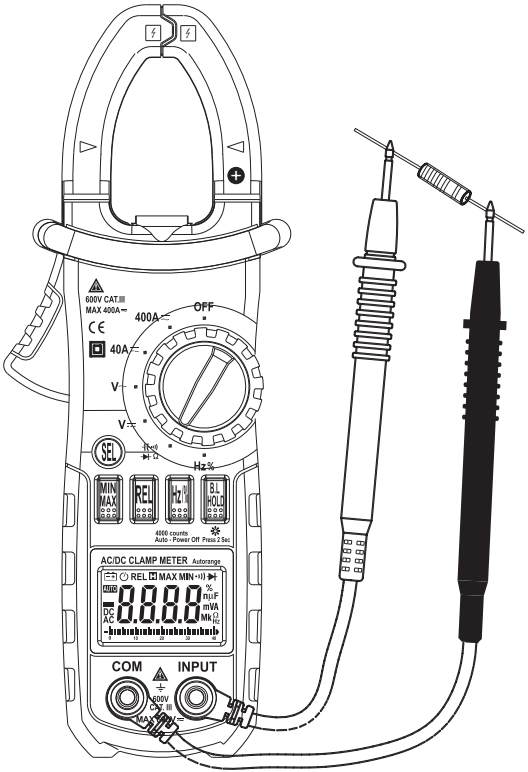

4.16 TESTING DIODE

4.16.1 Plug the black test lead into the **COM** jack and the red test lead into the **INPUT** jack.

4.16.2 Set the rotary selector to the range position.

4.16.3 Press the "**SEL**" button to switch to test.

4.16.4 Connect the red test lead to the anode and the black test lead to the cathode of the diode for testing.

4.16.5 Take the reading on the LCD.

NOTE:

- The meter will show the approximate forward voltage drop of the diode.
- When the test leads have been reversed or open, 'OL' will appear on the LCD.

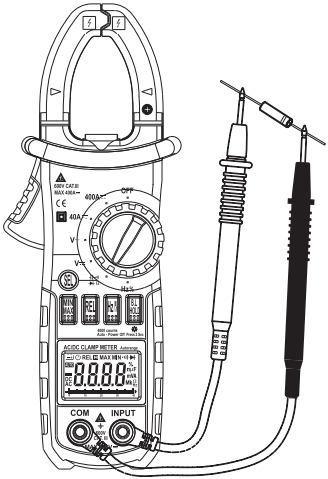

4.17 TESTING CONTINUITY

WARNING

Beware of Electrocution.

Make sure that the power of the circuit has been turned off and the capacitors have been fully discharged before testing the continuity of a circuit.

4.17.1 Plug the black test lead into the **COM** jack and the red test lead into the **INPUT** jack.

4.17.2 Set the rotary selector to the range position.

4.17.3 Press the "**SEL**" button to switch to continuity test.

4.17.4 Connect the test leads to the two ends of the circuit for measurement.

4.17.5 If the resistance of the circuit being tested is less than 40Ω, the built-in buzzer will maybe sound.

4.17.6 Take the reading on the LCD.

NOTE:

If the test leads are open or the resistance of the circuit is over 400Ω, "OL" will appear on the LCD.

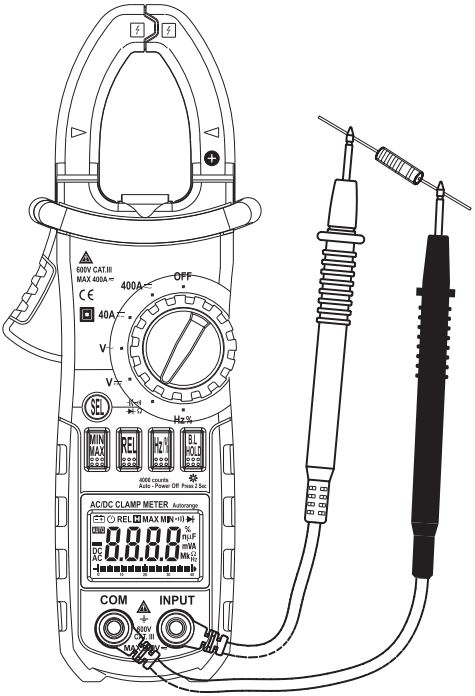
600V CAT.III
MAX 400A
400A
OFF
40A
V
SEL
Hz%
MIN MAX
REL
Hz%
BL HOLD
4000 counts
Auto - Power Off Press 2 Sec
AC/DC CLAMP METER Autorange
REL MAX MIN
COM
INPUT
600V
MAX 400A

4.18 MEASURING CAPACITANCE

WARNING

Beware of Electrocution.

To avoid electric shock, make sure that the capacitors have been fully discharged before measuring the capacitance of a capacitor.

4.18.1 Plug the black test lead into the **COM** jack and the red test lead into the **INPUT** jack.

4.18.2 Set the rotary selector to the range position.

4.18.3 After fully discharged the capacitor, connect the test leads to the two ends of the capacitor for measurement.

4.18.4 Take the reading on the LCD.

NOTE:

- It may take some time (about 30 seconds for the 400μF and 4000μF range) for steady readings when measuring high capacity.
- You must push the key "REL" when measure less than 20 nF.

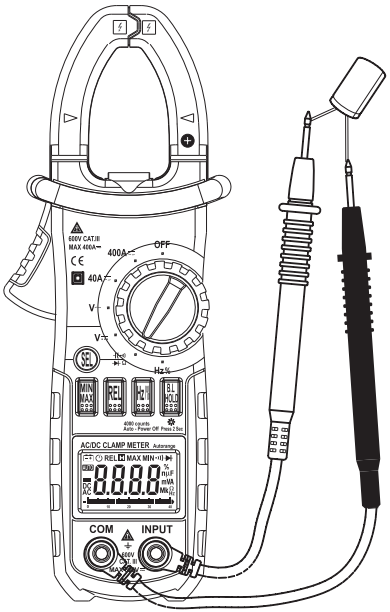
600V CAT.III
MAX 400A
400A
OFF
40A
V
V
SEL
Hz %
MIN MAX
REL
Hz
B.L HOLD
4080 counts
Auto - Power Off Press 2 Sec
AC/DC CLAMP METER Autorange
REL MAX MIN
AUTO
DC
AC
%
nμF
mVA
Mk
COM
INPUT
600V
CAT. III
MAX 400A

5. MAINTENANCE

5.1 REPLACING THE BATTERIES

WARNING

To avoid electric shock, make sure that the test leads have been clearly move away from the circuit under measurement before opening the battery cover of the meter.

5.1.1 If the sign "⊟+" appears, it means that the batteries should be replaced.

5.1.2 Loosen the fixing screw of the battery cover and remove it.

5.1.3 Replace the exhausted batteries with new ones.

5.1.4 Put the battery cover back and fix it again to its origin form.

NOTE:

Do not reverse the poles of the batteries.

5.2 REPLACING TEST LEADS

WARNING

The replacement must be test leads in good working condition with the same or equivalent rating: 600V 10A.

A test lead must be replaced if the insulation layer has been damaged, e.g. the wire inside is exposed.

6. ACCESSORIES

❶	Test Leads: Electric Ratings 1000V 10A	1 pair (set)
❷	Operating Manual	1 copy
❸	1.5V AAA Battery	3 piece