Table of Contents

1.	**SAFETY INFORMATION**	1
1.1	PRELIMINARY	1
1.2	DURING USE	2
1.3	SYMBOLS	3
1.4	MAINTENANCE	4
2.	**DESCRIPTION**	5
2.1	NAMES OF PARTS	6
2.2	**SWITCH, BUTTONS AND INPUT JACKS**	9
2.3	LCD (Liquid-crystal display)	10
3.	**SPECIFICATIONS**	12
3.1	GENERAL SPECIFICATIONS	12
3.2	TECHNICAL SPECIFICATIONS	13
4.	**OPERATION INSTRUCTION**	20
4.1	HOLDING READINGS	20
4.2	SWITCHING RANGES	20
4.3	SWITCHING FREQUENCY OR DUTY	21
4.4	SWITCHING MAXIMUM OR MINIMUM VALUE	21
4.5	SWITCHING FUNCTIONS	22
4.6	BACK LIGHT AND CLAMP LIGHTING BULB	23
4.7	AUTO POWER OFF	24
4.8	PREPARING FOR MEASUREMENT	24
4.9	MEASURING AC CURRENT	26
4.10	MEASURING INRUSH CURRENT	28
4.11	MEASURING DC CURRENT	30
4.12	MEASURING AC VOLTAGE	32
4.13	MEASURING DC VOLTAGE	34
4.14	MEASURING FREQUENCY	36
4.15	MEASURING DUTY	40
4.16	MEASURING RESISTANCE	44

4.17	TESTING DIODE	 46
4.18	TESTING CONTINUITY	 48
4.19	MEASURING CAPACITANCE	 50
5.	**MAINTENANCE**	 52
5.1	REPLACING THE BATTERIES	 52
5.2	REPLACING TEST LEADS	 54
6.	**ACCESSORIES**	 55

1. SAFETY INFORMATION

Warning

BE EXTREMELY CAREFUL WHEN USING THIS METER. Improper use of this device can result in electric shock or destruction of the meter. Take all normal safety precautions and follow the safeguards suggested in this manual.
To exploit full functionality of the meter and ensure safe operation, please read carefully and follow the directions in this manual.

This meter has been designed according to IEC-1010 concerning electronic measuring instruments with an overvoltage category CAT III 600V and pollution 2.
Follow all safety and operating instructions to ensure safe use of the meter.
With proper use and care, this digital multimeter will give you years of satisfactory service.

1.1 PRELIMINARY

- When using the meter, the user must observe all normal safety rules concerning:
  - General protection against electric shock
  - Protection of the meter against misuse
- When the meter is delivered, check whether it has been damaged in transit.
- After being stored and delivered under harsh conditions, the meter should be checked and confirmed whether any damages have been incurred.
- Test leads must be kept in good condition. Before using check whether the insulation on test leads has been damaged and any wire has been exposed.
- Use the test leads supplied to ensure operation safety. If required, they must be replaced with test leads of the same model or class.

1.2 DURING USE

- Use the right input jack, function and range.
- Do not take measurements that exceed the protection limit values indicated in the specifications.
- Do not touch the metal tips of the test leads when the meter is connected to the circuit to be measured.
- Keep your fingers behind the probe barriers when taking a measurement with an effective voltage above 60V DC or 30V rms AC.
- Do not take voltage measurement if the value between the terminals and earth ground exceeds 600V.
- Select the highest range if the value scale to be measured in the manual range is unknown.
- Disconnect the test leads from the circuit under test before turning the rotary selector to change functions.
- Do not measure the resistance , capacitance, diode or continuity of live circuits.
- Do not connect the meter to any voltage source while the rotary selector is in the current, resistance, capacitance, diode or continuity range.
- Do not take capacitance measurements until the capacitor to be measured has been fully discharged.
- Do not use the meter near explosive gases, steam or dirt.
- Stop using the meter if any abnormalities or faults are observed.
- Do not use the meter unless its rear case and battery cover is securely fastened in its original position.
- Do not store or use the meter in areas exposed to direct sunlight, at high temperature or with high relative humidity.

1.3 SYMBOLS

⚠	Caution, risk of danger (Important safety information; refer to the operation manual.)
ϟ	Application around and removal from HAZARDOUS LIVE conductors is permitted.
⧈	Double insulation (Protection class Ⅱ) .
CAT Ⅲ	Overvoltage (Installation) category Ⅲ, Pollution Degree 2 per IEC1010-1 refers to the level of Impulse Withstand Voltage protection provided.
CE	Conforms to European Union Directive
⏚	Earth (ground) terminal

1.4 MAINTENANCE

- Do not attempt to remove the rear case to adjust or repair the meter. Such actions should only be performed by a technician who fully understands the meter and the danger involved.
- Before opening the case and battery cover of the meter, always disconnect test leads from all sources of electric current. Disconnect the test leads from all sources of electric current before opening the rear case and battery cover of the meter.
- To avoid any electric shock caused by error readings, replace the batteries immediately when the "🔋" sign appears on the display.
- Use damp cloth and mild detergent to clean the meter; do not use abrasives or solvents.
- Turn the rotary selector to OFF position to switch off the power when the meter is not in use.
- Remove the batteries to avoid damages to the meter if it will idle for a long time.

2. DESCRIPTION

- This meter is a portable professional measuring instrument with LCD and back light easily reading. The 'single-hand operation' design for the range switch makes measurement simple and easy. Overload protection and low battery indication are provided. It is an ideal multi-function Instrument with scores of practical applications for professional, workshop, school, hobby and home use.
- The meter can perform measurements of AC/DC voltage and current, resistance , frequency, duty, capacitance, as well as continuity and diode test.
- Both auto range and manual range are available.
- This meter is equipped with reading hold function.
- This meter is equipped with true root mean square value measuring function (at AC A and AC V range).
- This meter is equipped with inrush current measuring function.
- This meter is equipped with auto zero function (at DCA range).
- This meter is equipped with maximum value measuring function.
- This meter is equipped with minimum value measuring function.
- This meter can measure frequency by clamp.
- This meter has function of auto power off.

2.1 NAMES OF COMPONENTS

1 Current Clamp
2 Clamp Lighting Bulb
3 Panel
4 Trigger
5 Function Switch Button (SEL)
6 MAX/MIN Switch Button (MAX/MIN)
7 Auto/Manual Switch Button (RAN)
8 Liquid Crystal Display (LCD)
9 COM Jack
10 Input Jack
11 Hz/Duty Switch Button (Hz/%)
12 Reading Hold/Back Light Button (HOLD/B.L)

13 Rotary selector
14 OFF - power switch
15 "+" Symbol
16 "-" Symbol
17 Rear Case
18 Fixing Screw of Battery Cover
19 Battery Cover

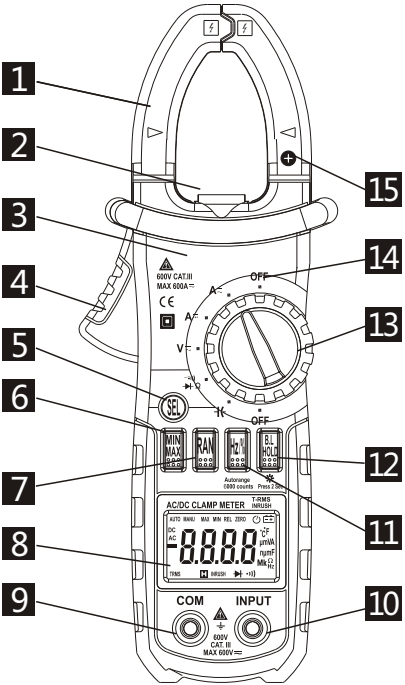

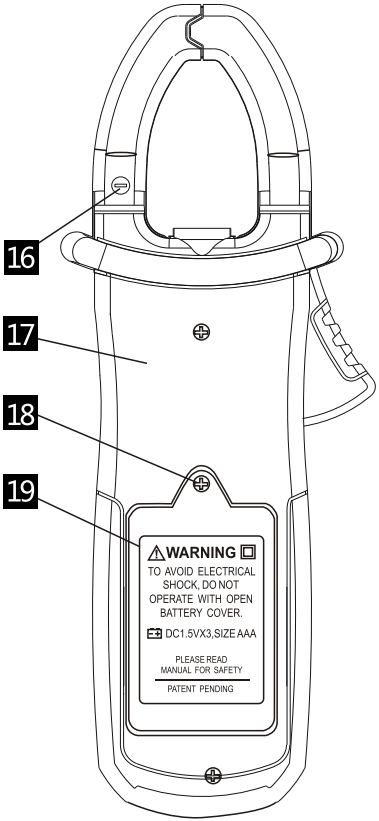
16
17
18
19
⚠WARNING
TO AVOID ELECTRICAL SHOCK, DO NOT OPERATE WITH OPEN BATTERY COVER.
DC1.5VX3,SIZE AAA
PLEASE READ MANUAL FOR SAFETY
PATENT PENDING

2.2 SWITCH, BUTTONS AND INPUT JACKS

HOLD/B.L Button

- For holding the reading or control backlight

SEL Button

- For switching among measuring functions

RAN Button

- For switching between auto and manual ranges.

Hz/% Button

- For switching between frequency and duty measuring functions.

MAX/MIN Button

- For switching between maximum and minimum value measuring function.

Rotary Selector

- For selecting functions and ranges.

OFF Position

- for turning off the power.

INPUT Jack

- For measuring voltage, resistance, frequency, duty, capacitance, diode, and continuity.

COM Jack

- Common input connection for current, voltage, resistance, frequency, duty, capacitance, diode, continuity measurement.

Clamp

- For measuring current

2.3 LCD (Liquid-crystal display)

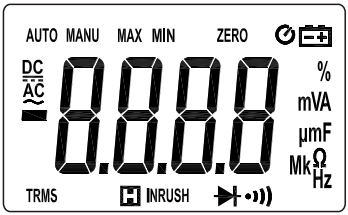

AC	Alternating current
DC	Direct current
	Diode test
	Continuity buzzer
AUTO	Auto range mode
MANU	Manual range mode
MAX	The maximum value is being measured
MIN	The minimum value is being measured.
ZERO	DCA zero
	Aotu power off
	Battery low
TRMS	True RMS
H	This indicates that the display data is being held.
INRUSH	Inrush current is being measured.
%	Percent (Duty cycle)
mV, V	Milli-volts, Volts (Voltage)
A	Amperes (Current)
µ F, mF	Micro-farad, Milli-farad (Capacitance)
Ω, kΩ, MΩ	Ohms, Kilo-ohms, Mega-ohms (Resistance)
Hz, kHz	Hertz, Kilo-hertz (Frequency)

3. SPECIFICATIONS

Calibration is required once a year, to be carried out at a temperature between 18°C and 28 °C (64°F to 82°F) and relative humidity below 75%.

3.1 GENERAL SPECIFICATIONS

- Auto range and manual range options are available.
- Overrange protection is provided for all ranges.
- Maximum voltage between terminals and earth ground: 600V DC or rms AC
- Operating altitude: max. 2000 meters (7000 ft.)
- Display: LCD
- Maximum value display: 6599 digits
- Polarity indication: automatic; '- ' for negative polarity.
- Overrange indication: '0L' or '-0L'
- Sampling Time: approx. 0.4 second per sample
- Unit indication: function and unit.
- Auto power off time: 30 min.
- Operating power : 1.5V×3 AAA batteries
- Battery low indication: ' ' on LCD
- Temperature factor: < 0.1×Accuracy /℃
- Operating temperature: 0℃ to 40℃ (32°F to 104°F)
- Storage temperature: -10℃ to 50℃ (10°F to 122°F)
- Dimension: 208×78×35mm
- Weight: approximate 340g (including batteries)

3.2 ELECTRICAL SPECIFICATIONS

Ambient temperature: 23±5℃ Relative humidity: < 75%

3.2.1 TRUE RMS

- For measuring non-sinusoidal waveforms, test error which is occurred by using True RMS measurement techniques is less than by using traditional average-reading techniques.
- Both sinusoidal and non-sinusoidal waveforms can be tested by True RMS Clamp Meter exactly. At AC A & AC V ranges, even short two test probes there are still 1-50 digits might be displayed on LCD. This is normal. Test result will not be affected.

- At AC A and AC V range, True RMS value can be tested only when input signal is more than 2% of full range.
- To ensure the precision of test result, input signal should be:
- AC voltage: > 13 mV
- AC current: > 1.3A

3.2.2 AC Current

Range	Resolution	Accuracy
66A	0.01A	± (3.0% of rdg + 10 digits)
600A	0.1A	

- Max. input current: 600A
- Frequency range: 40 to 400Hz
- Response: true root mean square value

3.2.3 INRUSH Current

Range	Resolution	Accuracy
66A	0.01A	<60A take it only as referance
600A	0.1A	± (10.0% of rdg + 60 digits)

- Integration Time: 100ms
- Measurement range: 30 ~ 600A
- Max. input current: 600A
- Frequency range: 40 to 400Hz
- Response: true root mean square value

3.2.4 DC Current

Range	Resolution	Accuracy
66A	0.01A	± (3.0% of rdg + 10 digits)
600A	0.1A	

- Max. input current: 600A DC

3.2.5 DC Voltage

Range	Resolution	Accuracy
660mV	0.1mV	± (0.8% of rdg + 3digits)
6.6V	0.001V	
66V	0.01V	
600V	0.1V	± (1.0% of rdg + 5digits)

- Input impedance: 10MΩ

- Overload protection: 660mV range: 250V DC or rms AC, 6.6V-600V ranges: 600V DC or 600V rms AC.
- Max. input voltage: 600V DC

NOTE:

At small voltage range, unsteady readings will appear before the test leads contact the circuit. This is normal because the meter is highly sensitive. When the test leads contact the circuit, the true reading will be shown.

3.2.6 AC Voltage

Range	Resolution	Accuracy
660mV	0.1mV	± (1.5% of rdg + 10digits)
6.6V	0.001V	± (1.2% of rdg + 5digits)
66V	0.01V	
600V	0.1V	± (1.5% of rdg + 10digits)

- Input impedance: 10MΩ
- Overload protection: 660mV range: 250V DC or rms AC, 66V-600V ranges: 600V DC or 600V rms AC.
- Max. input voltage: 600V rms AC
- Frequency range: 40 to 400Hz
- Response: true root mean square value

NOTE:

At small voltage range, unsteady readings will appear before the test leads contact the circuit. This is normal because the meter is highly sensitive. When the test leads contact the circuit, the true reading will be shown.

3.2.7 Frequency

3.2.7.1 By A range (from current clamp):

Range	Resolution	Accuracy
660Hz	0.1Hz	± (1.5% of rdg + 5 digits)
1kHz	0.0011Hz	
>1kHz	0.0011Hz	Take it only as referance

- Measurement range: 10 ~ 1kHz

- Input current range: ≥ 1A rms AC (higher input current at higher frequency)
- Max. Input current: 600A rms AC

3.2.7.2 By V range:

Range	Resolution	Accuracy
660Hz	0.1Hz	± (1.5% of rdg + 5 digits)
6.6kHz	0.001kHz	
10kHz	0.01kHz	
>10kHz	0.01kHz	Take it only as referance

- Measurement range: 10 ~ 10kHz
- Input voltage range: ≥ 0.2V rms AC (higher input voltage at higher frequency)
- Input impedance: 10MΩ
- Max. input voltage: 600V rms AC

3.2.8 Duty Cycle

Range	Resolution	Accuracy
10 - 95%	0.1%	± 3.0%

3.2.8.1 By A range (from current clamp):

- Frequency response: 10 ~1kHz
- Input current range: ≥ 1A rms AC (higher input current at higher frequency)
- Max. input current: 600A

3.2.8.2 By V range:

- Frequency response: 10 ~ 10 kHz
- Input voltage range: ≥ 0.2V rms AC (higher input voltage at higher frequency)
- Input impedance: 10MΩ
- Max. input voltage: 600V rms AC

3.2.9 Resistance

Range	Resolution	Accuracy
660Ω	0.1Ω	± (1.2% of rdg + 2digits)
6.6kΩ	0.001kΩ	
66kΩ	0.01kΩ	
660kΩ	0.1kΩ	
6.6MΩ	0.001MkΩ	
66MΩ	0.1MΩ	± (2.0% of rdg + 5digits)

- Open circuit voltage: 0.4V
- Overload protection: 250V DC or rms AC

3.2.10 Diode

Range	Resolution	Function
	0.001V	displaying approximate forward voltage of diode

- Forward DC current ~ 1mA
- Reversed DC voltage ~ 3.3V
- Overload protection: 250V DC or rms AC

3.2.11 Continuity

Range	Resolution	Function
	0. 1Ω	Built-in buzzer will sound, if resistance is lower than 30Ω.

- Open circuit voltage ~ 1.2V
- Overload protection: 250V DC or rms AC

3.2.12 Capacitance

Range	Resolution	Accuracy
6.6μF	0.001μF	<2μF ± (4.0% of rdg + 5 0digits)
66μF	0.01μF	± (4.0% of rdg + 3 digits)
660μF	0.1μF	
6.6mF	0.001mF	
66mF	0.01mF	

- Overload protection: 250V DC or rms AC

4. OPERATION INSTRUCTION

4.1 HOLDING READINGS

4.1.1 Press the "**HOLD/B.L**" button to hold the readings while taking measurement and the value on the display will be held.

4.1.2 Press the "**HOLD/B.L**" button again to release the reading hold function.

4.2 SWITCHING RANGES

4.2.1 When the meter is turned on, it is at the auto range mode for measuring current, voltage, resistance, capacitance and frequency.

4.2.2 Press the "**RAN**" button for manual range mode. The range will go up one level at each press and return to the lowest level when the highest level is reached.

4.2.3 Press the "**RAN**" button for one or more seconds to return to the auto range.

4.2.4 Press the "**RAN**" button to get back to normal test during working in maximum or minimum value measuring function,

NOTE:

At frequency range, meter can't be set to manual range mode.

4.3 SWITCHING FREQUENCY OR DUTY

4.3.1 During working at the voltage or current ranges, press the "**Hz/%**" button one time, frequency of the voltage or current will be measured. Press the "**Hz/%**" button twice, the meter will be changed into the duty range for measuring the duty cycle of the voltage or current. At the same time, the meter is changed into manual mode.

4.3.2 Press the "**Hz/%**" button again, meter will be back to the condition of the voltage or current measuring.

NOTE:

During working at maximum or minimum value measuring function, the meter can't be changed into frequency or duty cycle measuring mode.

4.4 SWITCHING MAXIMUM OR MINIMUM VALUE

4.3.1 At all ranges, press the "**MAX/MIN**" button one time, the meter can be set to maximum value measuring mode; press the button twice, the meter can be set to minimum value measuring mode; press the button three times, the meter will get back to normal test mode, and the maximum and minimum value will be recorded by the chip.

4.2.4 Press the " **MAX/MIN**" button more than one second or press the "**RAN**" button, the meter will get back to normal test.

NOTE:

- ◆ During measuring maximum or minimum value, the meter will be set to manual mode automatically.
- ◆ During working at frequency or duty measuring function, the meter can't be changed into maximum or minimum value measuring mode.

4.5 SWITCHING FUNCTIONS

4.5.1 AC A range

4.5.1.1 Press the "**SEL**" button, the meter will get into inrush current test mode.

4.5.1.2 If press the "**SEL**" button again, the meter will get into inrush current test mode again.

4.5.1.3 Press the " **SEL**" button more than one second or press the "**RAN**" button, the meter will get back to normal test mode.

4.5.2 DC A range

4.5.2.1 Press the "**SEL**" button, the meter will get into zero.

4.5.2.2 If press the "**SEL**" button again, the meter will get into zero again.

4.5.2.3 Press the " **SEL**" button more than one second or press the "**RAN**" button, the meter will get back to the normal test mode.

4.5.3 Press the "**SEL**" button to switch between AC and DC measurement at the voltage ranges.

4.5.4 Press the "**SEL**" button to switch among resistance, diode and continuity ranges.

4.6 BACK LIGHT AND CLAMP LIGHTING BULB

4.6.1 Press the " **HOLD/B.L**" button for two or more seconds to switch on the back light if the light in the environment is too dim for taking reading, which will last for 15 seconds.

4.6.2 During the back light is working, press the "**HOLD/B.L**" button for two or more seconds, it will be turned off.

4.6.3 At the current range, when the back light is switched on, the clamp lighting bulb will be turned on at the same time.

NOTE:

- LED, which requires a larger working current, is the main source of back light. Although the meter is equipped with a timer set at 15 seconds (i.e. the back light will be off automatically after 15 seconds), frequent use of the back light will shorten the life of the batteries. Therefore, do not use the back light unless necessary.
- When the battery voltage is ≤ 3.7V, the symbol "" (battery low) will appear on the LCD. When the back light is on, even if the batter is ≥ 3.7V, the "" may appear because of its large working current which will cause the voltage to drop. (The accuracy of the measurement cannot be assured when the "" symbol appears.) In this case, you need not replace the batteries yet. Normally, the batteries can last until the "" appears when the back light is not being used.

4.7 AUTO POWER OFF

4.7.1 If there is no any operation within any thirty minutes after power is on, meter will auto power off.

4.7.2 After auto power off, if press the "**SEL**" button, meter will recover the working condition.

4.7.3 Press both power on switch and one of " **MAX/MIN**" or "**RAM**" or "**Hz/%**" button at the same time more than one second for exiting auto power off function.

4.8 PREPARATING FOR MEASUREMENT

4.8.1 Switch on the power by turning the rotary selector. If the battery voltage is lower than 3.7V, the " " symbol will appear and the batteries should be replaced.

4.8.2 The "⚠" symbol shows that the input voltage or current should not exceed the specified value in order to protect the internal circuit from damage.

4.8.3 Turn the rotary selector to the required function and range to be measured. Under the manual mode, choose the highest range when the value scale to be measured is unknown.

4.8.4 Connect the common test lead first and then the charged test leads when making connection. Take away the charged test lead first when disconnecting.

4.9 MEASURING AC CURRENT

Warning

Beware of Electrocution.
Ensure that the test leads are disconnected from the meter before making current clamp measurements.

4.9.1 Set the rotary selector to the **A** ~ range position.

4.9.2 Auto range mode or manual range mode can be selected by pressing the "**RAN**" button.

4.9.3 Press the trigger to open jaw. Fully enclose only one conductor.

4.9.4 Take the reading on the LCD.

NOTE:

- ◆ Do not put more than one cable into the jaw during test, otherwise incorrect test value might be obtained.
- ◆ For optimum results, center the conductor in the jaw.
- ◆ At the manual range mode, when only 'OL' is shown on the LCD, it means the measurement has exceeded the range. A higher range should be selected.
- ◆ Under the manual range mode, when the scale of the value to be measured is unknown beforehand, set the range to the highest.
- ◆ "⚠" means the maximum input current is 600A rms AC.

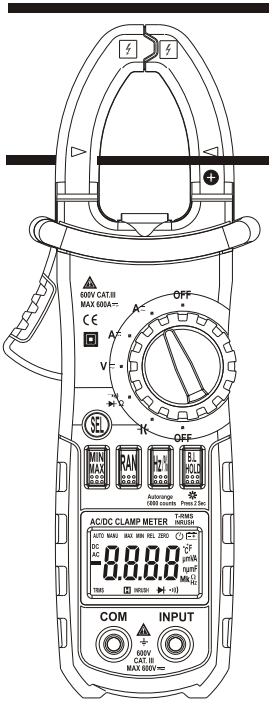

Correct

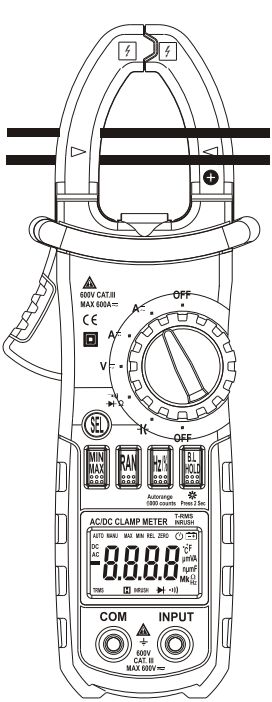

Incorrcet

4.10 MEASURING INRUSH CURRENT

Warning

Beware of Electrocution.
Ensure that the test leads are disconnected from the meter before making current clamp measurements.

4.10.1 Set the rotary selector to the **A** ~ range position.
4.10.2 Press the trigger to open jaw. Fully enclose only one conductor.
4.10.3 Press the "**SEL**" to enter the INRUSH current measurement mode. Then LCD displays "- - - - " until the motor starting up and being detected. The detection will be done only one time and the output reading will be hold.
4.10.4 Take the reading on the LCD.

NOTE:

- ◆ Do not put more than one cable into the jaw during test, otherwise incorrect test value might be obtained.
- ◆ For optimum results, center the conductor in the jaw.
- ◆ At the manual range mode, when only 'OL' is shown on the LCD, it means the measurement has exceeded the range. A higher range should be selected.
- ◆ Under the manual range mode, when the scale of the value to be measured is unknown beforehand, set the range to the highest.
- ◆ "⚠" means the maximum input current is 600A rms AC.

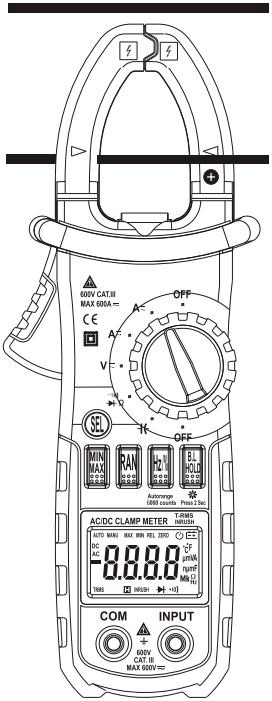

Correct

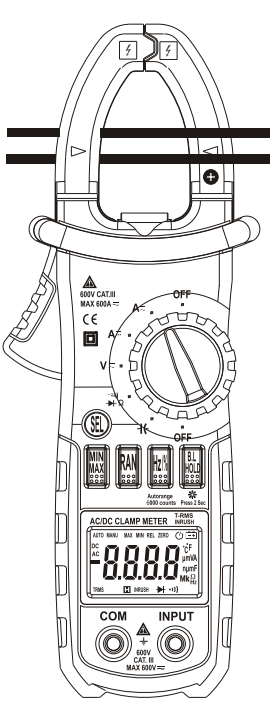

Incorrcet

4.11 MEASURING DC CURRENT

Warning

Beware of Electrocution.
Ensure that the test leads are disconnected from the meter before making current clamp measurements.

4.11.1 Set the rotary selector to the **A** ⎓ range position.

4.11.2 Auto range mode or manual range mode can be selected by pressing the "**RAN**" button.

4.11.3 Press the "**SEL**" button, the meter will be set to zero.

4.11.4 Press the trigger to open jaw. Fully enclose only one conductor.

4.11.5 Take the reading on the LCD.

4.11.6 Symbol "**-**" will be displayed on LCD if the direction of the current is negative.

NOTE:

- ◆ Do not put more than one cable into the jaw during test, otherwise incorrect test value might be obtained.
- ◆ For optimum results, press the "**SEL**" button to make the meter get into zero first.
- ◆ For optimum results, center the conductor in the jaw.
- ◆ At the manual range mode, when only 'OL' or '-OL' is shown on the LCD, it means the measurement has exceeded the range. A higher range should be selected.
- ◆ Under the manual range mode, when the scale of the value to be measured is unknown beforehand, set the range to the highest.
- ◆ "⚠" means the maximum input current is 600A DC.

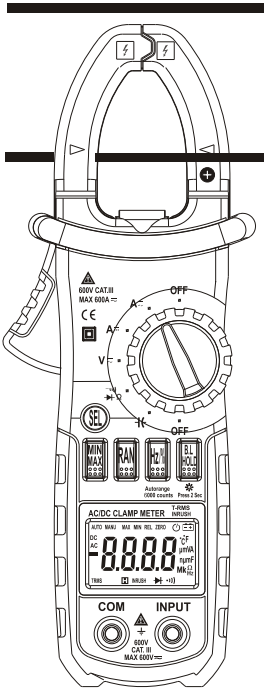

Correct

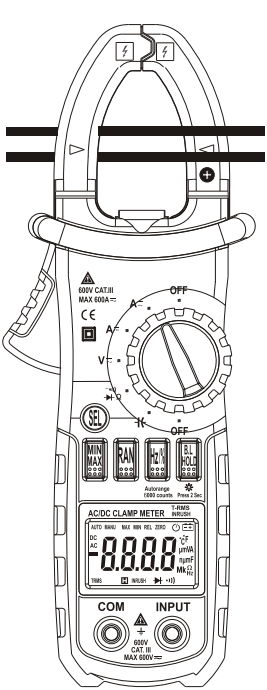

Incorrcet

4.12 MEASURING AC VOLTAGE

Warning

Beware of Electrocution.
Pay special attention to avoid electric shock when measuring high voltage.
Do not input the voltage which more than 600V rms AC.

4.12.1 Plug the black test lead into the **COM** jack and the red test lead into the **INPUT** jack.

4.12.2 Set the rotary selector to **V≂** position to make the meter get into AC V range.

4.12.3 Auto range mode or manual range mode can be selected by pressing the "**RAN**" button.

4.12.4 Connect the test leads to the voltage source or load terminals for measurement.

4.12.5 Take the reading on the LCD.

NOTE:

- At small voltage range, unsteady readings may appear before the test leads contact the circuit. This is normal because the meter is highly sensitive. When the test leads contact the circuit, the true reading will be shown.
- At the manual range mode, when only 'OL' is shown on the LCD, it means the measurement has exceeded the range. A higher range should be selected.
- At the manual range mode, when the scale of the value to be measured is unknown beforehand, select the highest range first and lower the range gradually.
- "⚠" means the maximum input voltage is 600V rms AC.
- If the test result is more than 610V rms AC, symbol "OL" will be displayed on LCD and the build-up buzzer will sound.

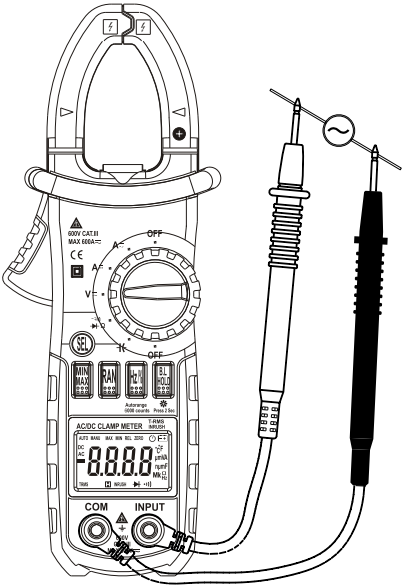

4.13 MEASURING DC VOLTAGE

Warning

Beware of Electrocution.
Pay special attention to avoid electric shock when measuring high voltage.
Do not input the voltage which more than 600V DC.

4.13.1 Plug the black test lead into the **COM** jack and the red test lead into the **INPUT** jack.

4.13.2 Set the rotary selector to at the **V≂** range position.

4.13.3 Press the "**SEL**" button to turn to DC V range. Auto range mode or manual range mode can be selected by pressing the "**RAN**" button.

4.13.4 Connect the test leads to the voltage source or load terminals for measurement.

4.13.5 Take the reading on the LCD. The polarity symbol denotes the polarity of the end connected by the red test lead.

NOTE:

- At small voltage range, unsteady readings will appear before the test leads contact the circuit. This is normal because the meter is highly sensitive. When the test leads contact the circuit, the true reading will be shown.
- Under the manual range mode, when only 'OL' or '-OL' is shown on the LCD, it means the measurement has exceeded the range. A higher range should be selected.
- Under the manual range mode, when the scale of the value to be measured is unknown beforehand, select the highest range first and lower the range gradually.
- "⚠" means the maximum input voltage is 600V DC.
- If the test result is more than 610V DC, symbol "OL" will be displayed on LCD and the build-up buzzer will sound.

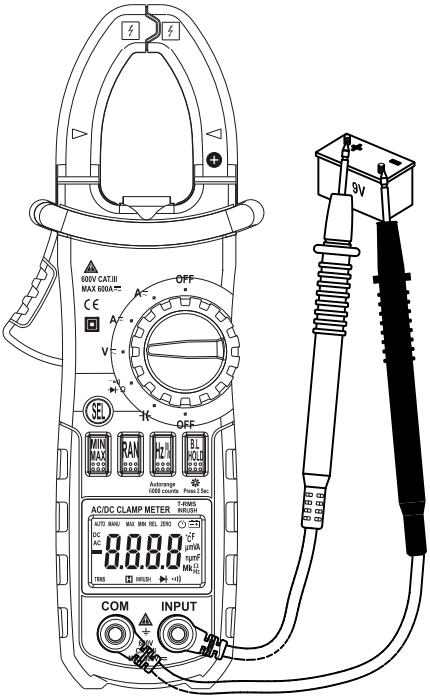
9V
600V CAT.III
MAX 600A
OFF
A
A
V
SEL
OFF
MIN MAX
RAN
Hz/%
BL HOLD
Autorange
6000 counts
Press 2 Sec
AC/DC CLAMP METER
T-RMS
INRUSH
AUTO MANU MAX MIN REL ZERO
DC
AC
TRIG
INRUSH
COM
INPUT
1000V
600V

4.14 MEASURING FREQUENCY

4.14.1 **By A range (from current clamp):**

Warning

Beware of Electrocution.
Ensure that the test leads are disconnected from the meter before making current clamp measurements.

4.14.1.1 Set the rotary selector to the **A** range (A ~ or A ⎓) position.

4.14.1.2 Press the trigger to open jaw. Fully enclose only one conductor.

4.14.1.3 Press the "**Hz/%**" to switch to the frequency measurement.

4.14.1.4 Take the reading on the LCD.

NOTE:

- Do not put more than one cable into the jaw during test, otherwise incorrect test value might be obtained.
- Frequency test range is 10Hz - 1kHz. '00.0' will be displayed on LCD if the test frequency is lower than 10.0 Hz. It is possible to test the frequency which is higher than 1 kHz but the tolerance of the test result can not be ensure.
- "⚠" means the maximum input current is 600A rms AC.

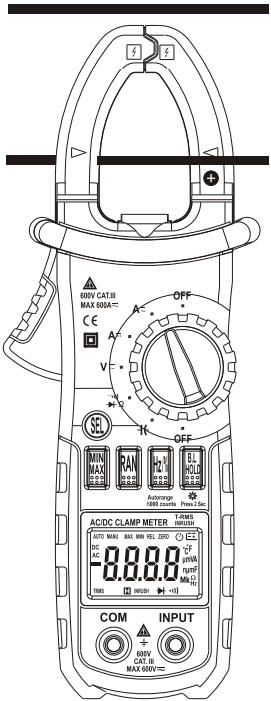

Correct

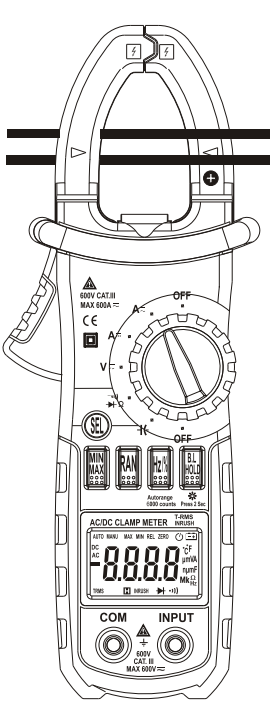

Incorrcet

4.14.2 **By V range:**

Warning

Beware of Electrocution.
Pay special attention to avoid electric shock when measuring high voltage.
Do not input the voltage which more than 600V rms AC.

4.14.2.1 Plug the black test lead into the **COM** jack and the red test lead into the **INPUT** jack.
4.14.2.2 Set the rotary selector to the **V≂** range position.
4.14.2.3 Press the "**Hz/%**" to switch to frequency measurement.
4.14.2.4 Connect test leads to the two ends of the source or load for measurement.
4.14.2.5 Take the reading on the LCD.

NOTE:

- Frequency test range is 10Hz -10kHz. '00.0' will be displayed on LCD if the test frequency is lower than 10.0 Hz. It is possible to test the frequency which is higher than 10kHz but the tolerance of the test result can not be ensure.
- "⚠" means the maximum input voltage is 600V rms AC.

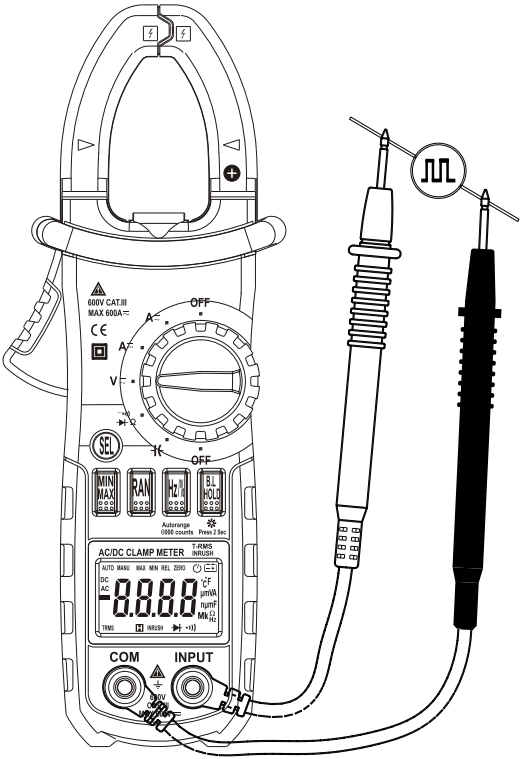
600V CAT.III
MAX 600A
OFF
SEL
MIN MAX
RAN
Hz/%
REL HOLD
Autorange
Press 2 Sec
AC/DC CLAMP METER
T-RMS
INRUSH
COM
INPUT

4.15 MEASURING DUTY

4.15.1 **By A range (from current clamp):**

Warning

Beware of Electrocution.
Ensure that the test leads are disconnected from the meter before making current clamp measurements.

4.15.1.1 Set the rotary selector to the **A** range (A ~ or A ⎓) position.

4.15.1.2 Press the trigger to open jaw. Fully enclose only one conductor.

4.15.1.3 Press the "**Hz/%**" to switch to the DUTY measurement.

4.15.1.4 Take the reading on the LCD.

NOTE:

- Do not put more than one cable into the jaw during test, otherwise incorrect test value might be obtained.
- If the duty cycle is less than 10%, symbol 'UL' will be displayed on LCD; if the duty cycle is more than 94.9%, symbol 'OL' will be displayed on LCD.
- The input signal frequency range is 10 – 1kHz. It is possible to test duty cycle of the higher than 1 kHz frequency signal, but the tolerance of the test result can not be ensure.
- "⚠" means the maximum input current is 600A rms AC.

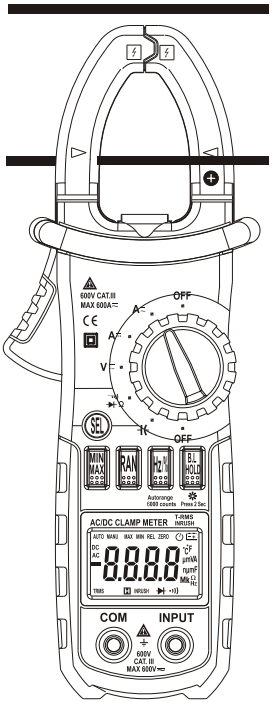

Correct

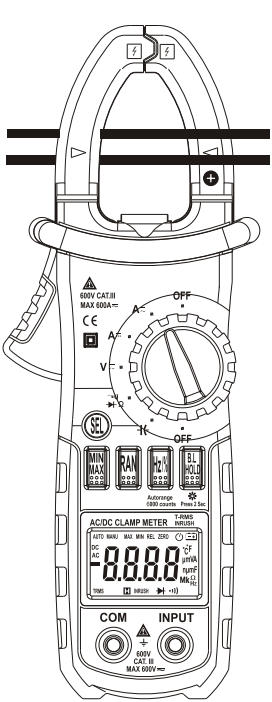

Incorrcet

4.15.2 By V range:

Warning

Beware of Electrocution.
Pay special attention to avoid electric shock when measuring high voltage.
Do not input the voltage which more than 600V rms AC.

4.15.2.1 Plug the black test lead into the **COM** jack and the red test lead into the **INPUT** jack.

4.15.2.2 Set the rotary selector to the V ≂ range position.

4.15.2.3 Press the "**Hz/%**" to switch to DUTY measurement.

4.15.2.4 Connect test leads to the two end of the source or load for measurement.

4.15.2.5 Take the reading on the LCD.

NOTE:

- If the duty cycle is less than 10%, symbol 'UL' will be displayed on LCD; if the duty cycle is more than 94.9%, symbol 'OL' will be displayed on LCD.
- The input signal frequency range is 10 – 10 kHz. It is possible to test duty cycle of the higher than 10 kHz frequency signal, but the tolerance of the test result can not be ensure.
- "⚠" means the maximum input voltage is 600V rms AC.

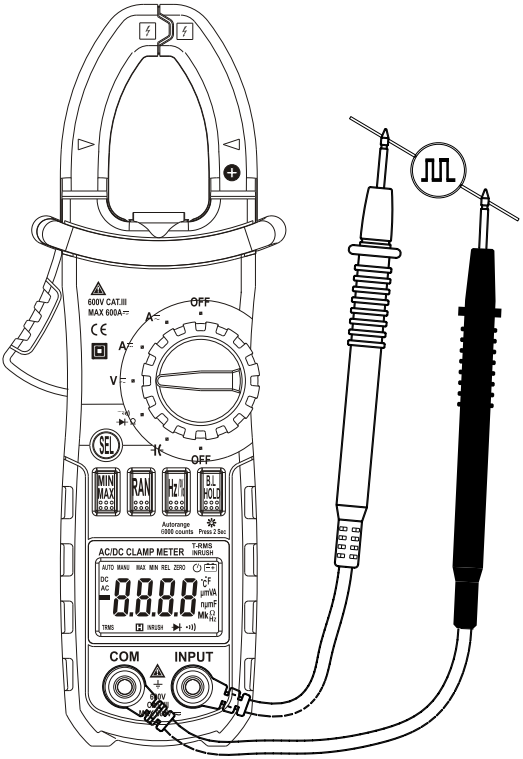
600V CAT.III
MAX 600A
OFF
SEL
MIN MAX
RAN
Hz/%
B.L HOLD
Autorange
6000 counts
Press 2 Sec
AC/DC CLAMP METER
T-RMS
INRUSH
AUTO MANU MAX MIN REL ZERO
DC
AC
TRMS
INRUSH
COM
INPUT

4.16 MEASURING RESISTANCE

Warning

Beware of Electrocution.
When measuring in-circuit resistance, make sure that the power of the circuit under test has been turned off and that all capacitors have been fully discharged.

4.16.1 Plug the black test lead into the **COM** jack and the red test lead into the **INPUT** jack.

4.16.2 Set the rotary selector to the Ω range position to make the meter get into AC V range.

4.16.3 Auto range mode or manual range mode can be selected by pressing the "**RAN**" button.

4.16.4 Connect the test leads to the ends of the resistor or circuit for measurement.

4.16.5 Take the reading on the LCD.

NOTE:

- At the manual range mode, when only 'OL' is shown on the LCD, it means the measurement has exceeded the range. A higher range should be selected.
- When the input is open, 'OL' will appear on the LCD to indicate that the range has been exceeded.
- For measuring resistance above 1MΩ, it may take a few seconds to get a steady reading. This is normal for high resistance reading.

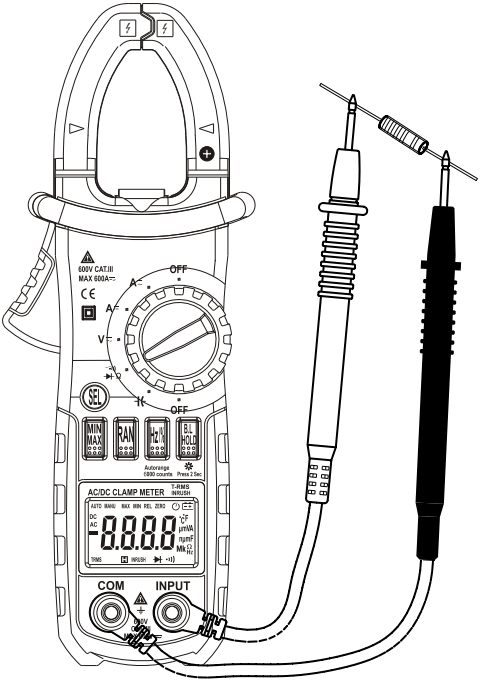
600V CAT.III
MAX 600A
OFF
A
V
SEL
OFF
MIN
MAX
RAN
Hz
B.L.
HOLD
Autorange
(000 counts
Press 2 Sec
AC/DC CLAMP METER
T-RMS
INRUSH
AUTO
MANU
MAX
MIN
REL
ZERO
DC
AC
-8.8.8.8
°F
µmVA
nµmF
Mk
TRMS
INRUSH
COM
INPUT

4.17 TESTING DIODE

4.17.1 Plug the black test lead into the **COM** jack and the red test lead into the **INPUT** jack.

4.17.2 Set the rotary selector to the Ω •)) ⊣◀ range position.

4.17.3 Press the "**SEL**" button to switch to ⊣◀ test.

4.17.4 Connect the red test lead to the anode and the black test lead to the cathode of the diode for testing.

4.17.5 Take the reading on the LCD.

NOTE:

- ◆ The meter will show the approximate forward voltage drop of the diode.
- ◆ When the test leads have been reversed or open, 'OL' will appear on the LCD.

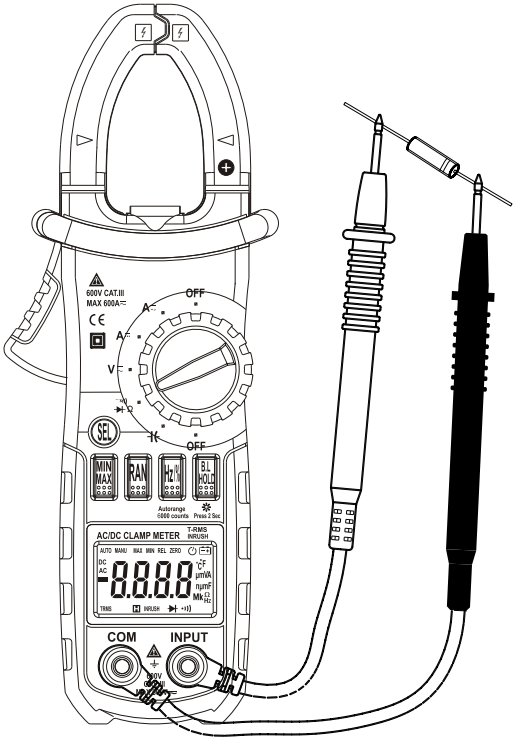
600V CAT.III
MAX 600A
OFF
SEL
MIN MAX
RAN
Hz%
BL HOLD
Autorange
6000 counts
Press 2 Sec
AC/DC CLAMP METER
T-RMS
INRUSH
AUTO MANU MAX MIN REL ZERO
DC
AC
TRMS
INRUSH
COM
INPUT
600V

4.18 TESTING CONTINUITY

Warning

Beware of Electrocution.
Make sure that the power of the circuit has been turned off and the capacitors have been fully discharged before testing the continuity of a circuit.

4.18.1 Plug the black test lead into the **COM** jack and the red test lead into the **INPUT** jack.

4.18.2 Set the rotary selector to the Ω •)) ▶| range position.

4.18.3 Press the "**SEL**" button to switch to •)) continuity test.

4.18.4 Connect the test leads to the two ends of the circuit for measurement.

4.18.5 If the resistance of the circuit being tested is less than 30Ω, the built-in buzzer will sound.

4.18.6 Take the reading on the LCD.

NOTE:

If the test leads are open or the resistance of the circuit is over 660Ω, "OL" will appear on the LCD.

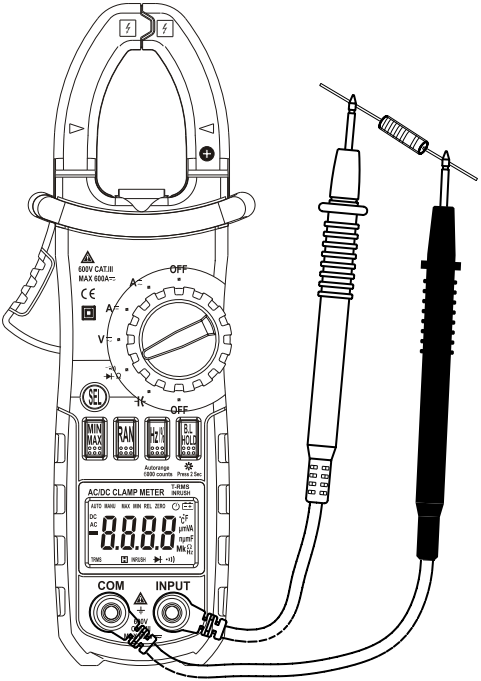
600V CAT.III
MAX 600A
OFF
SEL
MIN MAX
RAN
Hz %
B.L HOLD
Autorange
1999 counts
Press 2 Sec
AC/DC CLAMP METER
TRMS
INRUSH
AUTO MANU MAX MIN REL ZERO
DC
AC
TRMS
INRUSH
COM
INPUT

4.19 MEASURING CAPACITANCE

Warning

Beware of Electrocution.
To avoid electric shock, make sure that the capacitors have been fully discharged before measuring the capacitance of a capacitor.

4.19.1 Plug the black test lead into the **COM** jack and the red test lead into the **INPUT** jack.

4.19.2 Set the rotary selector to the ⊣⊢ range position.

4.19.3 After fully discharged the capacitor, connect the test leads to the two ends of the capacitor for measurement.

4.19.4 Take the reading on the LCD.

NOTE:

It may take some time (about 10 seconds for the 66mF range) for steady readings when measuring high capacity.

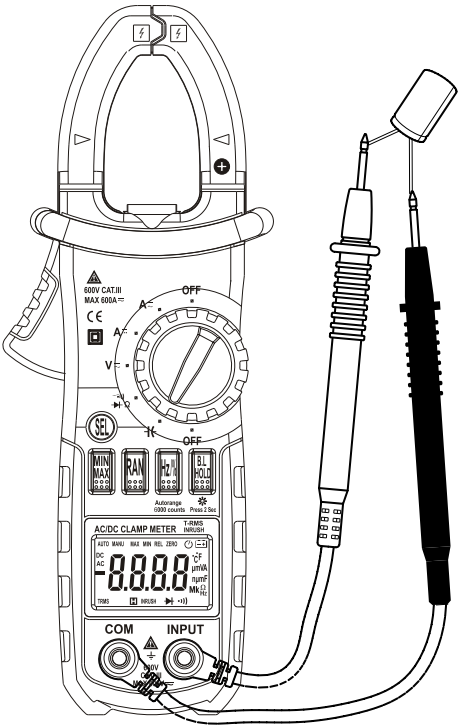
600V CAT.III
MAX 600A
OFF
A
A
V
SEL
OFF
MIN MAX
RAN
Hz/%
B.L HOLD
Autorange
6000 counts
Press 2 Sec
AC/DC CLAMP METER
T-RMS
INRUSH
AUTO MANU MAX MIN REL ZERO
DC
AC
-8.8.8.8
°C/F
µmVA
nµmF
Mk Ω
Hz
TRMS
INRUSH
COM
INPUT
600V

5. MAINTENANCE

5.1 REPLACING THE BATTERIES

Warning

To avoid electric shock, make sure that the test leads have been clearly move away from the circuit under measurement before opening the battery cover of the meter.

5.1.1 If the sign "⊟+" appears, it means that the batteries should be replaced.

5.1.2 Loosen the fixing screw of the battery cover and remove it.

5.1.3 Replace the exhausted batteries with new ones.

5.1.4 Put the battery cover back and fix it again to its origin form.

NOTE:

Do not reverse the poles of the batteries.

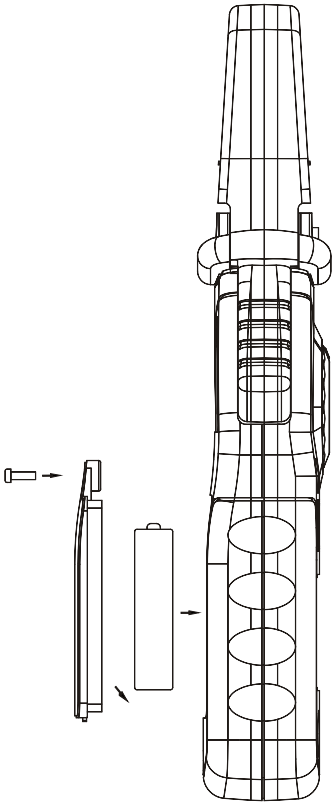

5.2 REPLACING TEST LEADS

The replacement must be test leads in good working condition with the same or equivalent rating: 1000V 10A.

A test lead must be replaced if the insulation layer has been damaged, e.g. the wire inside is exposed.

6. ACCESSORIES

❶	Test Leads: Electric Ratings 1000V 10A	1 pair (set)
❷	Operating Manual	1 copy
❸	1.5V AAA Battery	3 piece